MAE162D:
MECHANICAL PRODUCT DESIGN-I
Lecture
Motion Control

Instructor: **Professor Tsao**

Mechanical & Aerospace Engineering Department
University of California Los Angeles

Winter 2026

The motor-rotor configuration has the following linear dynamic model:

$$\frac{d\theta_m}{dt} = \omega_m$$

$$J_m \frac{d\omega_m}{dt} = -b_m\omega_m + K_m i - T_{m_gears}$$

$$L\frac{di}{dt} = -Ri - K_m\omega_m + V \cdot u, \quad (-1 < u < 1)$$

u is the H-Bridge PWM duty cycle

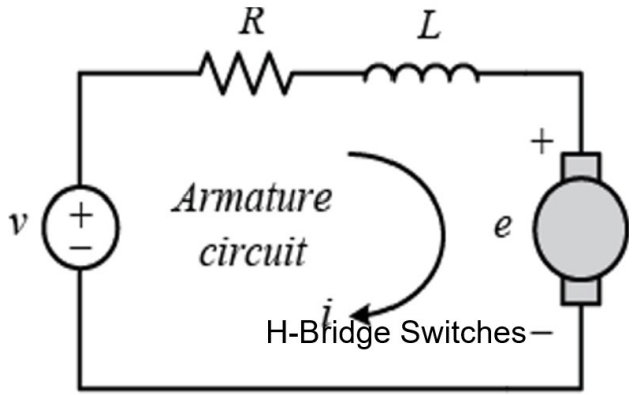

Gear (Speed reduction to amplify toruque, N >>1) : $\omega_m = N\omega_L, NT_{m_gears} = T_{L_gears}$

$$J_L \frac{d\omega_L}{dt} = -b\omega_L - K_L\theta_L + T_{L_gears} - T_L$$

Motor Simplified Model

In most cases, the motor's electric time constant is much smaller than the mechanical time constant, i.e.

$$L/R \ll J_m/b_m$$

The model may be simplified and the duty cycle command is equivalent to torque:

$$J_m \frac{d\omega_m}{dt} = -b_m\omega_m + K_m i - T_{m_gears}$$

$$0 = -Ri - K_m\omega_m + V \cdot u, \quad (-1 < u < 1)$$

$$\rightarrow$$

$$J_m \frac{d\omega_m}{dt} = -b_m\omega_m + K_m \frac{-K_m\omega_m + V \cdot u}{R} - T_{m_gears}$$

$$= -(b_m + \frac{K_m^2}{R})\omega_m + \frac{K_m V}{R} \cdot u - T_{m_gears}$$

$$\omega_m(s) = \frac{K_u \cdot u(s) - K_T T_{m_gears}(s)}{\tau s + 1}$$

$$\tau = \frac{J_m}{b_m + \frac{K_m^2}{R}}, K_u = \frac{\frac{K_m V}{R}}{b_m + \frac{K_m^2}{R}}, K_T = \frac{1}{b_m + \frac{K_m^2}{R}}$$

The motor-rotor configuration has the following linear dynamic model:

Equivalent (aka Reflected) Loads on the Motor Side

$$T_{m_gears} = \frac{1}{N} T_{L_gears} = \frac{1}{N}(J_L \frac{d\omega_L}{dt} + b_L \omega_L + K_L \theta_L + T_L) = \frac{1}{N}(J_L \frac{1}{N}\frac{d\omega_m}{dt} + b_L \frac{1}{N}\omega_m + K_L \frac{1}{N}\theta_m + T_L)$$

$$\rightarrow J_m \frac{d\omega_m}{dt} = -b_m \omega_m + K_m i - \frac{1}{N}(J_L \frac{1}{N}\frac{d\omega_m}{dt} + b_L \frac{1}{N}\omega_m + K_L \frac{1}{N}\theta_m + T_L)$$

$$\rightarrow (J_m + \frac{1}{N^2} J_L)\frac{d^2\theta_m}{dt^2} + (b_m + \frac{1}{N^2} b_L)\frac{d\theta_m}{dt} + \frac{1}{N^2} K_L \theta_m = K_m i - \frac{1}{N} T_L$$

$$\frac{L}{R} \ll 1 \rightarrow i = \frac{-K_m \omega_m + V_s u}{R}$$

$$\rightarrow (J_m + \frac{1}{N^2} J_L)\frac{d^2\theta_m}{dt^2} + (\frac{K_m^2}{R} + b_m + \frac{1}{N^2} b_L)\frac{d\theta_m}{dt} + \frac{1}{N^2} K_L \theta_m = \frac{K_m V_s u}{R} - \frac{1}{N} T_L$$

Reflected on the motor side:

- Load side torque reduces by N times.
- Load side inertia/spring/damping coefficients reduce by N^2 times.

Equivalent (aka Reflected) Motor Constants on the Load Side

$$T_{L_gears} = NT_{m_gears} = N(-J_m \frac{(N)d\omega_L}{dt} - b_m(N)\omega_L) + K_m i)$$

$$J_L \frac{d\omega_L}{dt} = -b_L\omega_L - K_L\theta_L + N(-J_m \frac{(N)d\omega_L}{dt} - b_m(N)\omega_L) + K_m i) - T_L$$

$$\rightarrow (J_L + N^2 J_m)\frac{d^2\theta_L}{dt^2} + (b_L + N^2 b_m)\frac{d\theta_L}{dt} + K_L\theta_L = NK_m i - T_L$$

$$\frac{L}{R} \ll 1 \rightarrow i = \frac{-K_m(N)\omega_L + V_s u}{R}$$

$$\rightarrow (J_L + N^2 J_m)\frac{d^2\theta_L}{dt^2} + (b_L + N^2 b_m + \frac{(NK_m)^2}{R})\frac{d\theta_L}{dt} + K_L\theta_L = \frac{(NK_m)V_s u}{R} - T_L$$

Reflected on the load side:

- Motor constant and back emf coefficient increase by N times: *Km→NKm*.
- Motor side inertia/spring/damping coefficients increase by N^2 times.

$$(J_m + \frac{1}{N^2}J_L)\frac{d^2\theta_m}{dt^2} + (\frac{K_m^2}{R} + b_m + \frac{1}{N^2}b_L)\frac{d\theta_m}{dt} + \frac{1}{N^2}K_L\theta_m = \frac{K_m V_s u}{R} - \frac{1}{N}T_L$$

PI Motor Speed Control

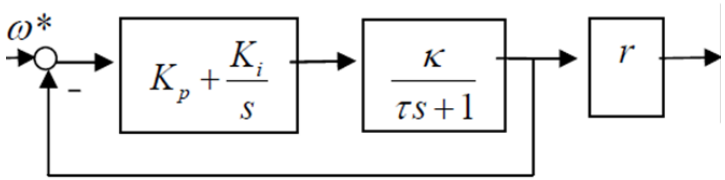

$$(J_m + \frac{1}{N^2}J_L)\frac{d\omega_m}{dt} + (\frac{K_m^2}{R} + b_m + \frac{1}{N^2}b_L)\omega_m = \frac{K_m V_s u}{R} - \frac{1}{N}T_L$$

Laplace Transform:

Plant: $(\tau s+1)\omega_m(s) = K_u u(s) - K_T T_L(s)$

PI Control: $u(s) = (K_p + \frac{K_i}{s})(\omega^*(s) - \omega_m(s))$

$$\rightarrow (\tau s+1)\omega_m(s) = K_u(K_p + \frac{K_i}{s})(\omega^*(s) - \omega_m(s)) - K_T T_L(s)$$

$$\rightarrow \omega_m(s) = \frac{K_u(K_p s + K_i)}{s(\tau s+1) + K_u(K_p s + K_i)}\omega^*(s) - \frac{K_T s}{s(\tau s+1) + K_u(K_p s + K_i)}T_L(s)$$

$$\frac{\omega_m(s)}{\omega^*(s)} = G(s) = \frac{K_u(K_p s + K_i)}{s(\tau s+1) + K_u(K_p s + K_i)} = \frac{(\frac{K_p}{K_i}s+1)\cdot\omega_n^2}{s^2 + 2\zeta\omega_n s + \omega_n^2}$$

$$\omega_n^2 = \frac{K_u K_i}{\tau}, 2\zeta\omega_n = \frac{1+K_u K_p}{\tau}$$

$$K_p \uparrow, \omega_n \mapsto, \zeta \uparrow$$

$$K_i \uparrow, \omega_n \uparrow, \zeta \downarrow$$

- Precision: Steady state error =0 for constant command or disturbance.
- Dynamics: closed loop damping ratio and natural frequency

PID Motor Speed Control

Continuous-Time PID Control:

$$u(t) = sat_U \left(K_P \cdot e(t) + K_D \cdot \frac{de}{dt} + K_I \cdot m(t) \right)$$

$$m(t) = sat_M \left(\int_o^t e(\tau) d\tau \right)$$

Discrete-Time Software Realization:

$$u(k) = sat_U \left(K_P \cdot e(k) + K_D \cdot \frac{e(k) - e(k-2)}{2T_s} + K_I \cdot m(k) \right)$$

$$m(k) = sat_M \left(m(k-1) + T_s \cdot e(k) \right)$$

PI Feedback Loop for Speed Control

vehicle's gain & time constant

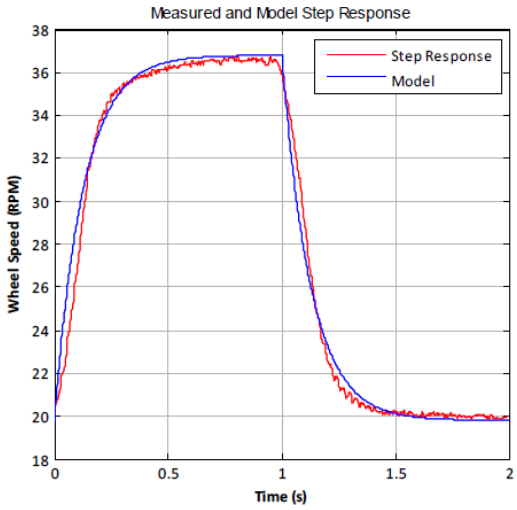

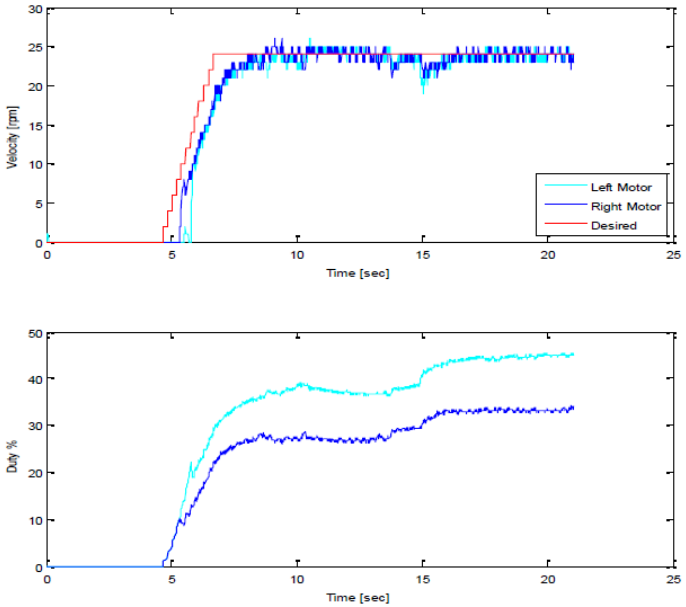

Demonstrate that PI Control works!

Adaptive Cruise Control: Proportional Position Control

Adaptive Cruise Control: Distance keeping

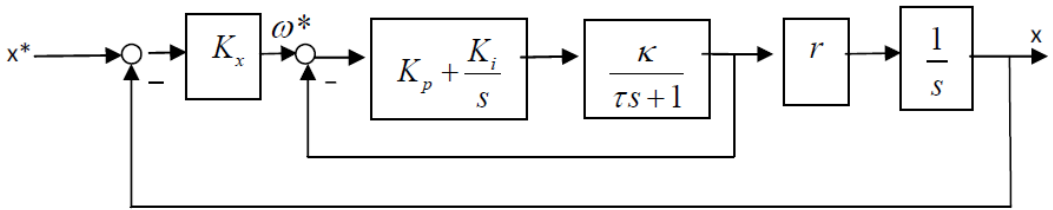

Characteristic equation (closed loop poles):

$$1+\frac{K_x r}{s}\cdot\frac{(\frac{K_p}{K_i}s+1)\cdot\omega_n^2}{s^2+2\zeta\omega_n s+\omega_n^2}=1+K\cdot\frac{(s+a)}{s(s^2+2\zeta\omega_n s+\omega_n^2)}=0$$

$$(K=K_x r\frac{K_p}{K_i}\cdot\omega_n^2, a=\frac{K_i}{K_p})$$

Velocity loop:

$$\frac{\omega_m(s)}{\omega^*(s)}=G(s)=\frac{(\frac{K_p}{K_i}s+1)\cdot\omega_n^2}{s^2+2\zeta\omega_n s+\omega_n^2}$$

Position loop:

$$\frac{x(s)}{x^*(s)}=T(s)=\frac{\frac{K_x r}{s}\cdot G(s)}{1+\frac{K_x r}{s}\cdot G(s)}$$

- Precision: Steady state error =0 for constant position command or disturbance.
- Dynamics: 3rd order, closed loop time constant, damping ratio and natural frequency (effect of the control gain by root locus plot)

$$K_x\uparrow,\omega_n\uparrow,\zeta\downarrow,\tau_x\downarrow$$

Differential Drive Robot Kinematics

https://www.mathworks.com/help/robotics/ref/differentialdrivekinematicmodel.html

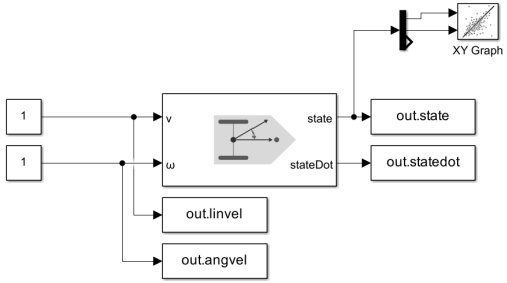

Input: speed (and displacement) of left and right wheels
State: robot position and angle
Parameter: wheel radius: r, wheel span: d

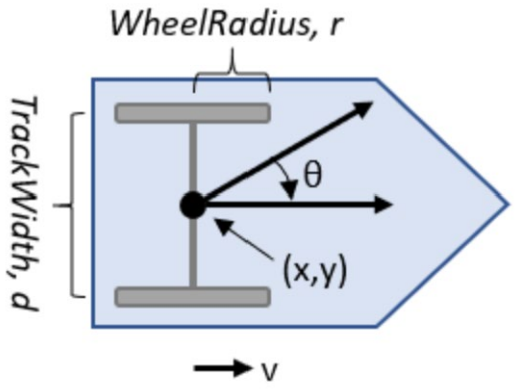

$$v(t) = \dot{s}(t) = \frac{v_L(t) + v_R(t)}{2} = \frac{\omega_L(t) + \omega_R(t)}{2} \cdot r$$

$$\dot{\theta}(t) = \frac{-v_L(t) + v_R(t)}{d} = (-\omega_L(t) + \omega_R(t)) \cdot \frac{r}{d}$$

$$\dot{x}(t) = v(t) \cdot \cos\theta(t) = \frac{\omega_L(t) + \omega_R(t)}{2} \cdot r \cdot \cos\theta(t)$$

$$\dot{y}(t) = v(t) \cdot \sin\theta(t) = \frac{\omega_L(t) + \omega_R(t)}{2} \cdot r \cdot \sin\theta(t)$$

Differential Drive Robot Trajectory – Forward Kinematics

$$\dot{\theta}(t) = 0 \rightarrow \text{ straight line motion, } \quad v(t) = 0 \rightarrow \text{ rotating without translation.}$$

$$v(t) = \text{constant}, \dot{\theta}(t) = \text{constant} \rightarrow \text{ circular arc (radius R)}$$

$$\mathrm{R} \cdot \dot{\theta} = \frac{v_L + v_R}{2}, \quad \dot{\theta} = \frac{-v_L + v_R}{d} \rightarrow R = \frac{d}{2}\frac{v_L + v_R}{-v_L + v_R} = \frac{d}{2}\frac{\omega_L + \omega_R}{-\omega_L + \omega_R}$$

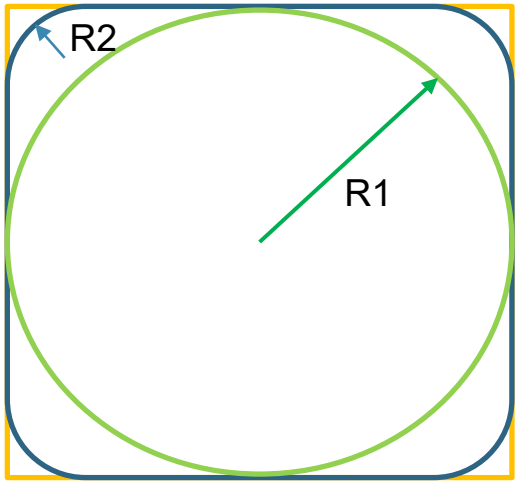

- Path composed of segments of lines and arcs (radius of curvature R)
- Trajectory is determined by the angular rate, move time is arc angle over angle rate

Differential Drive Robot Trajectory – Inverse Kinematics

$$-v_L + v_R = \dot{\theta} d, \quad \frac{v_L + v_R}{2} = R\dot{\theta} d$$

$$\rightarrow v_R = (R + \frac{1}{2})\dot{\theta} d, \quad v_L = (R - \frac{1}{2})\dot{\theta} d$$

Longitudinal and Lateral Driving Control

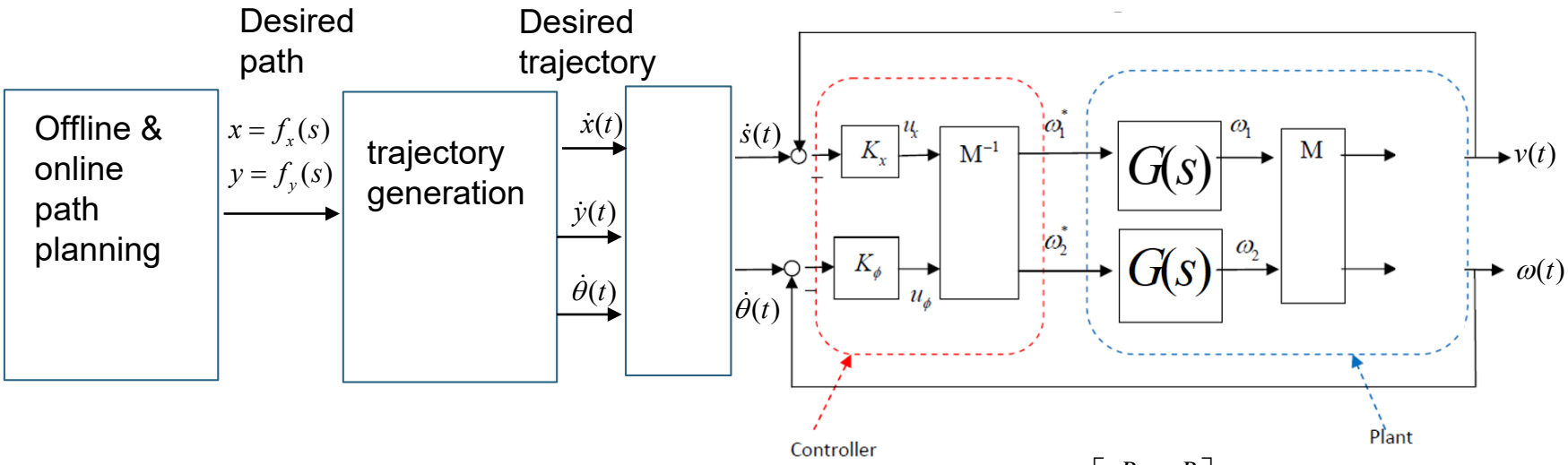

$$M = \begin{bmatrix} \frac{R}{2} & \frac{R}{2} \\ -\frac{R}{d} & \frac{R}{d} \end{bmatrix}$$

Differential Drive Motion Simulink Simulation: Without Motor Control Loop

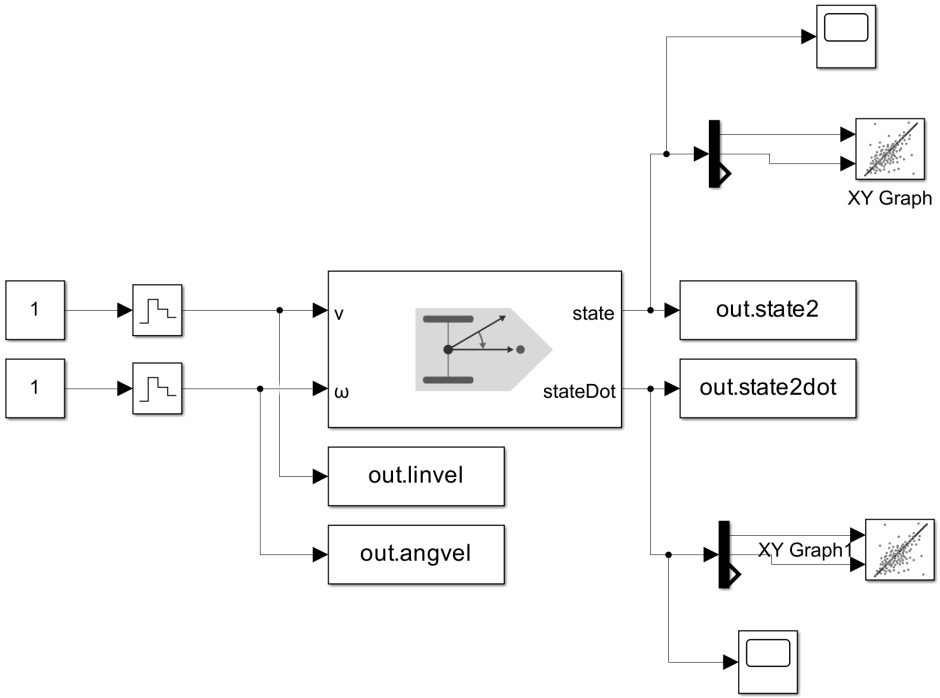
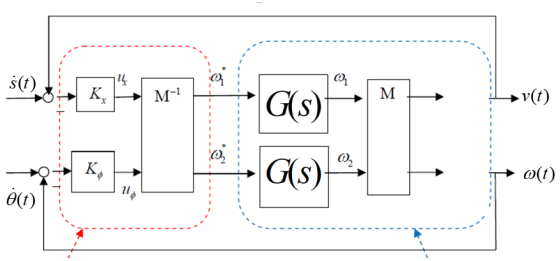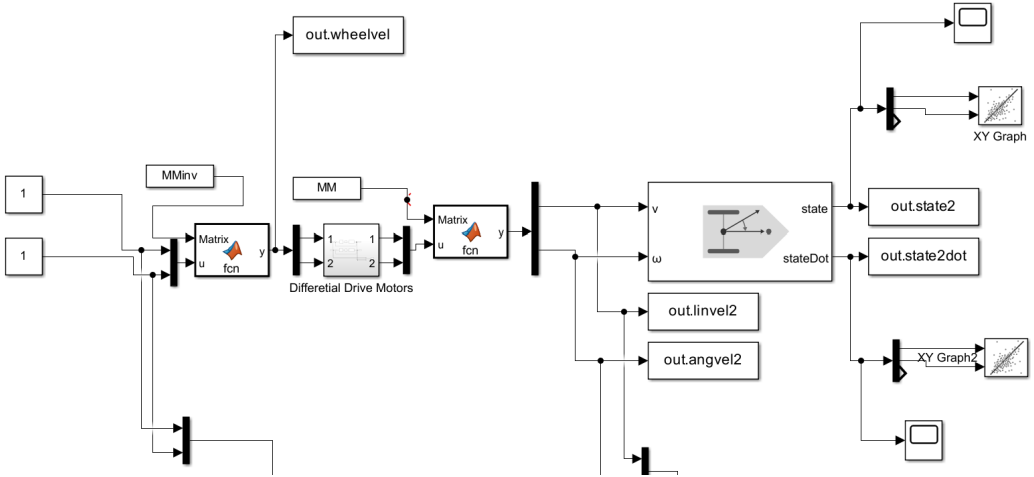
Differential Drive Motion Simulink Simulation: With Motor Control Loop